THIS DRAWING IS UNPUBLISHED. RELEASED FOR PUBLICATION
© COPYRIGHT ALL RIGHTS RESERVED.

REVISIONS

P	LTR	DESCRIPTION	DATE	DWN	APVD
	A1	RELEASED	14MAR2008	YH	HG
	A1	REVISED (ECR-15-017879)	09DEC2015	YH	HG

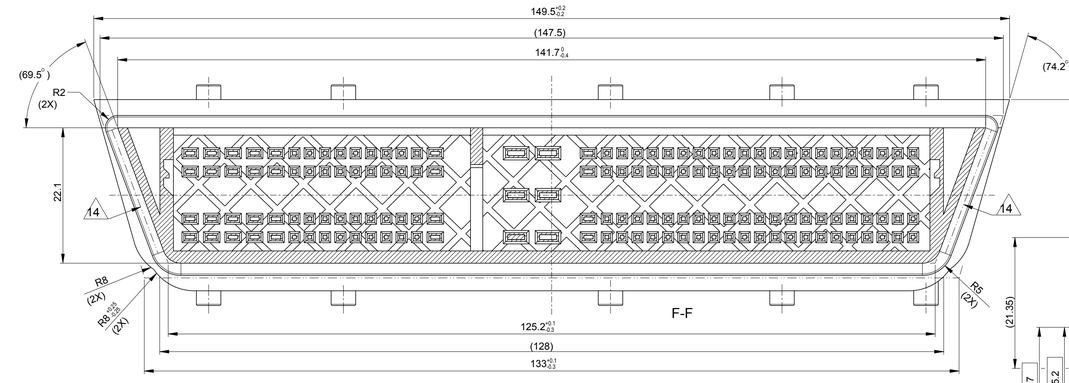

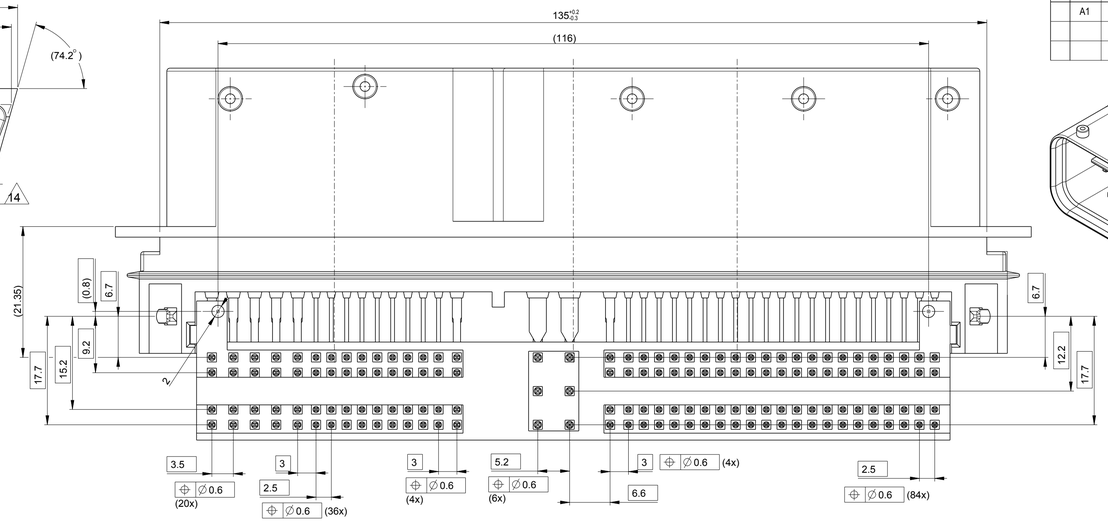

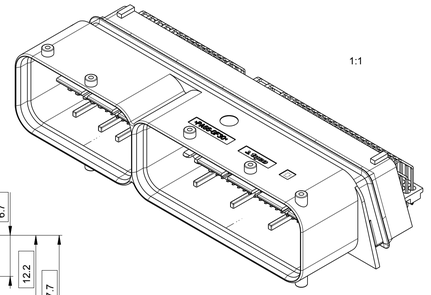

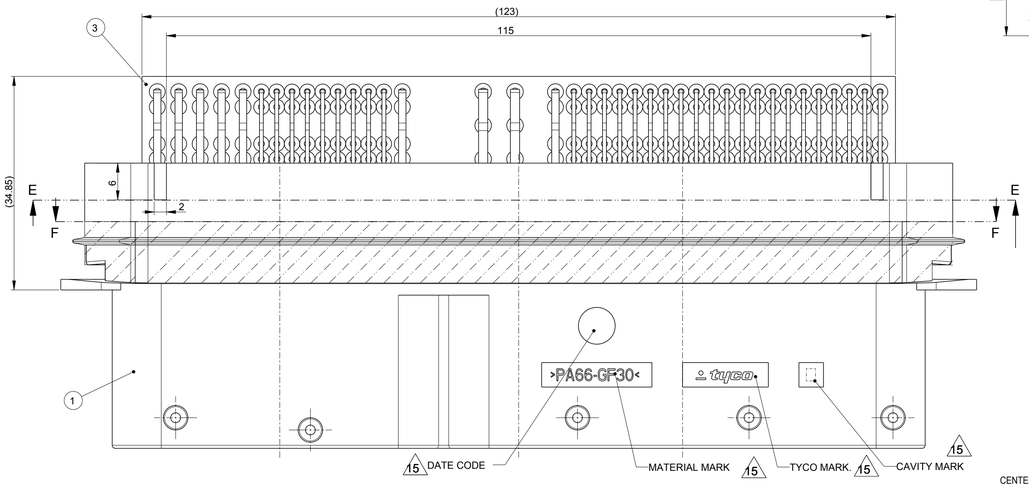

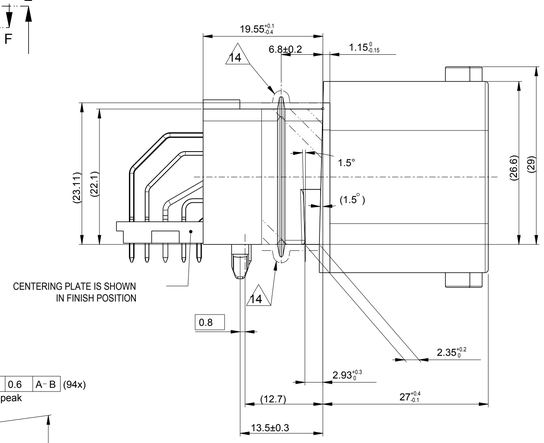

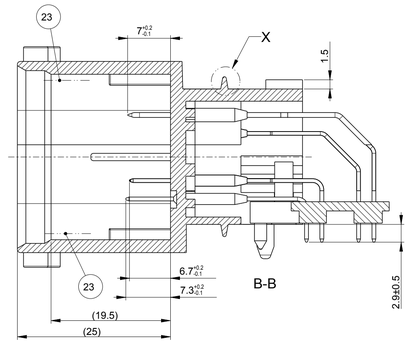

DESCRITION WITHOUT CENTERING PLATE

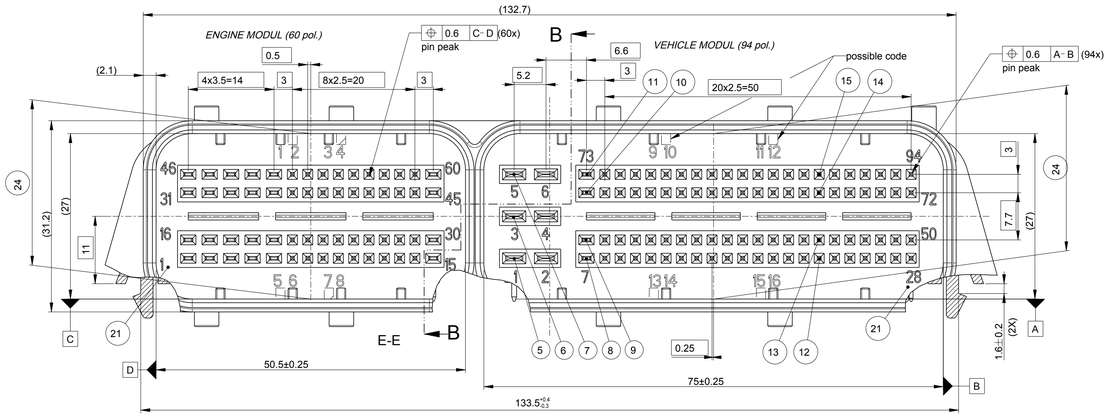

INFORMATION ONLY FOR P.C.B LAYOUT2:1

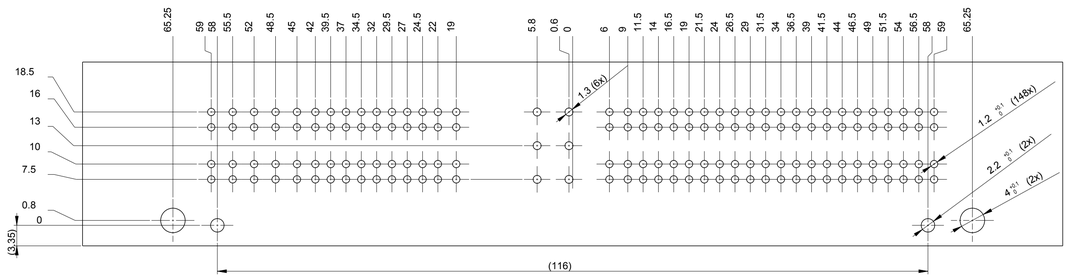

VIEWS LESS PIN MOUNTING VERSION 1-1897294-2

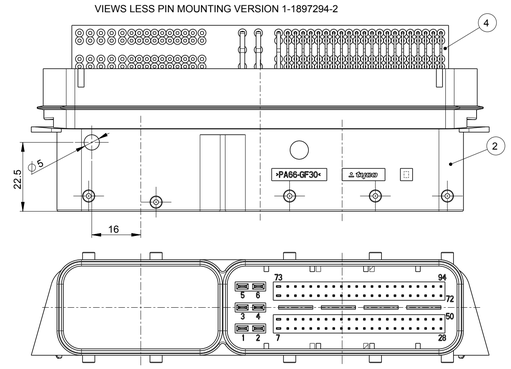

INFORMATION ONLY FOR P.C.B LAYOUT(94P)

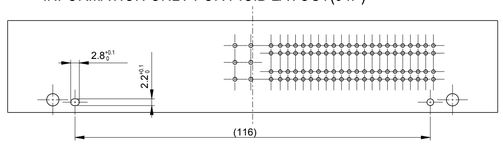

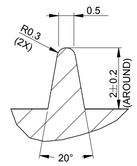

DETAIL X
SCALE 10:1

comments:

1 dimensions requiring process capability analysis

2 pins 0.63x0.63: CuSn6 F41 DIN 17670, alternative F48
current load: 3A max. at room temperature
contact-eject force min 40N - test speed 50mm/min

3 flat pin 2.8x0.8: CuSn6 F41 DIN 17670, alternative F48
current load: 15A max. at room temperature
contact-eject force min. 80N test speed 50mm/min

4 flat pin 1.5x0.6: CuSn6 F41 DIN 17670, alternative F48
current load: 15A max. at room temperature
contact-eject force min. 55N test speed 50mm/min

5 solderability according to DIN IEC 68, part 2-20

6 isolation resist between contacts > 100MΩ

7 plastic part connector PA66-GF 30
centering plate PA66-GF 50
parts free of parting with silicone

8 leak rate of the connector in the housing
max. 10ml/min at -200mbar (depression)

9 life time: 10 plug cycle, test at room temperature

10 delivery with centering plate in pre-lock position

11 technical terms of delivery

12 burr max 0.2 raised - not allowed in sealing area

13 not injection mark in sealing area and in front of the pin header

14 sealing area (no parting allowed)

15 deepend area, font and marking raised

16 radii without dimension R=0.5

COMMENTS

21 POSITION NUMBER DEPRESSED

22 OPTION DESIGN

23 TOOL SURFACE POLISHED ALL AROUND Ra<0.7µm. BURR, PARTING LINE AND INJECTION MARKS ARE NOT ALLOWED

24 REACTION DELAY MAX. 0.5mm

25 CONTACT EJECT FORCE: NOTES

26 WITHOUT PINS IN SMALL CONNECTOR CAVITY.

CODING	Modul 60	Modul 94	Tyco ASS'Y drawing no.
Z	-	-	0-1897294-2
Z	-	-	1-1897294-2
C	2,3,6,7	10,11,14,15	TBD
D	2,4,6,8	12,14,14,16	TBD
E	1,3,6,8	9,11,14,16	TBD
F	2,4,5,7	10,12,13,15	TBD
G	2,3,5,8	10,11,13,16	TBD
H	1,4,6,7	9,12,14,15	TBD

NO	FINISH/ COLOR	MATERIAL	DESCRIPTION	Q'TY FOR ASS'Y (1-1897294-2)	Q'TY FOR ASS'Y (0-1897294-2)
15	TINNED	CuSn6	0.63mm TAB(E.L)	21	30
14	TINNED	CuSn6	0.63mm TAB(L)	21	30
13	TINNED	CuSn6	0.63mm TAB(M)	21	30
12	TINNED	CuSn6	0.63mm TAB(S)	21	30
11	TINNED	CuSn6	1.5mm TAB(E.L)	1	7
10	TINNED	CuSn6	1.5mm TAB(L)	1	7
9	TINNED	CuSn6	1.5mm TAB(M)	1	7
8	TINNED	CuSn6	1.5mm TAB(S)	1	7
7	TINNED	CuSn6	2.8mm TAB(L)	2	2
6	TINNED	CuSn6	2.8mm TAB(M)	2	2
5	TINNED	CuSn6	2.8mm TAB(S)	2	2
4	NATURAL	PA66-GF50	JOINT HSG "B"	1	-
3	BLACK	PA66-GF50	JOINT HSG "A"	-	1
2	BLACK	PA66-GF30	HEADER HSG(94P)	1	-
1	BLACK	PA66-GF30	HEADER HSG(154P)	-	1

THIS DRAWING IS A CONTROLLED DOCUMENT.

DIMENSIONS: MM

TOLERANCES UNLESS OTHERWISE SPECIFIED: 0 PLC ±, 1 PLC ±, 2 PLC ±, 3 PLC ±, 4 PLC ±, ANGLES ±, DIN 16901-140

MATERIAL

FINISH

DWN YH MA
CHK KT LIM
APVD HG CHO
PRODUCT SPEC 108-61055
APPLICATION SPEC 411-61004,114-61015
WEIGHT -

TE Connectivity

NAME 154WAY, PIN-HEADER ASS'Y

SIZE A1 | CAGE CODE 00779 | DRAWING NO C- 1897294 | RESTRICTED TO

CUSTOMER DRAWING | SCALE 2:1 | SHEET 1 OF 1 | REV A1

4805 (3/13)