THIS DRAWING IS UNPUBLISHED. RELEASED FOR PUBLICATION 20
© COPYRIGHT 20 BY - ALL RIGHTS RESERVED.

LOC	DIST
HM	00

REVISIONS

P	LTR	DESCRIPTION	DATE	DWN	APVD
	D	ADD 1-3, REV ECO-10-004736	08MAR2010	LH	SA
	D2	REV ECO-11-008739	27APR2011	LH	SA
	D3	REV; ECO-11-021924	04NOV2011	GG	SA

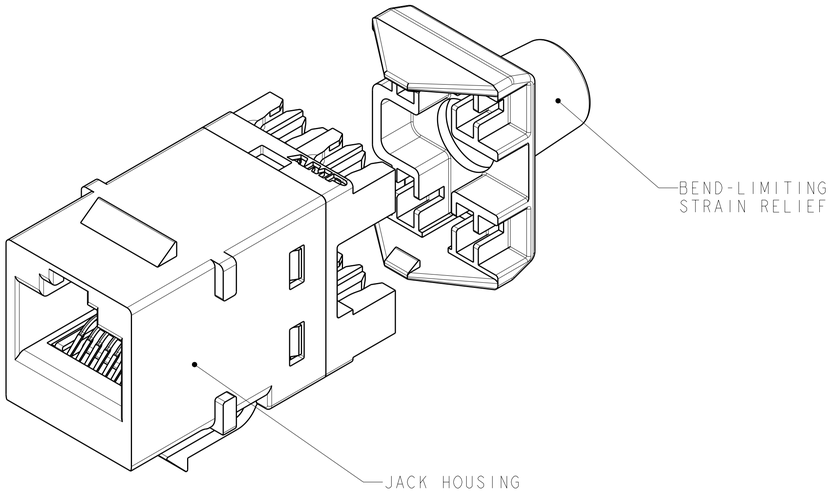

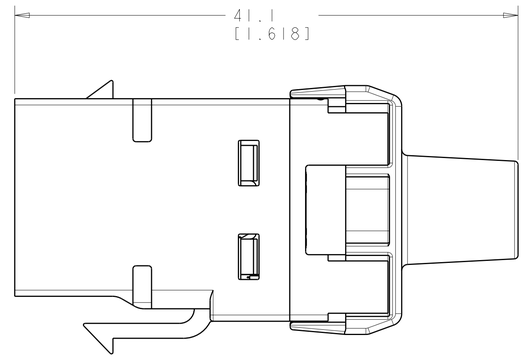

SHOWN WITH STRAIN
RELIEF ASSEMBLED

1. MATERIAL: JACK HOUSING - POLYCARBONATE, 94V-0 RATED.
   110 BLOCK AND BEND LIMITING STRAIN RELIEF - POLYCARBONATE.
   ARRAY TRAY - PBT POLYESTER.
   JACK CONTACTS ARRAY - BERYLLIUM COPPER, PLATED WITH 1.27µm [.000050] MINIMUM THICK GOLD IN LOCALIZED AREA AND 3.81µm [.000150] MINIMUM THICK MATTE TIN IN BOARD INTERFACE AREA OVER 1.27µm [.000050] MINIMUM THICK NICKEL UNDERPLATE.
   IDC TERMINALS - PHOSPHOROUS BRONZE, PLATED WITH 3.81µm [.00015] MINIMUM THICK MATTE TIN OVER 1.27µm [.00005] MINIMUM THICK NICKEL UNDERPLATE.
2. KL 110 JACK WILL TERMINATE 22-24 AWG SOLID CONDUCTORS, 1.27[.050] MAXIMUM INSULATION DIAMETER. JACK WILL ACCEPT CONDUCTORS UP TO 1.45 [.057] BUT REQUIRE THE USE OF A STRAIN RELIEF
3. CAVITY CONFORMS TO FCC RULES AND REGULATIONS) PART 68 SUBPART F REQUIREMENTS.
4. MOUNTING PANEL THICKNESS 1.22 - 1.55 [.048 - .061].
5. THESE TWO SUGGESTED CUTOUT OPENINGS ARE USED IN TANDEM WITH DUAL FRONT AND BACK CUTOUTS.
6. ONE MODULAR JACK ASSEMBLY PER POLYBAG.
7. USE IS OPTIONAL.
8. REFER TO 408-8858 FOR TERMINATION INSTRUCTIONS USING SL SERIES TOOL TERMINATION. REFER TO 408-8417 FOR TERMINATION INSTRUCTIONS USING 110 PUNCH DOWN TOOL.

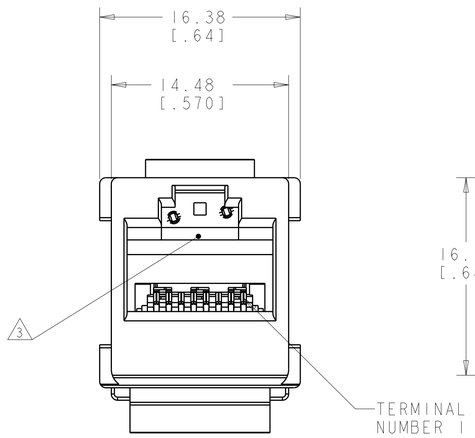

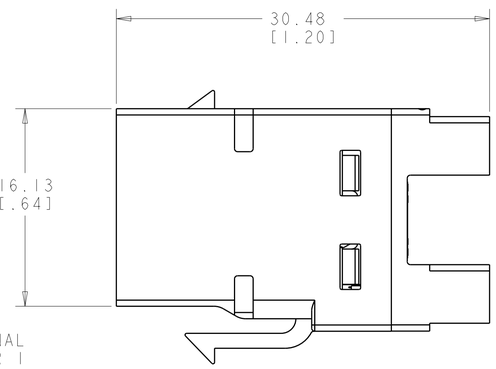

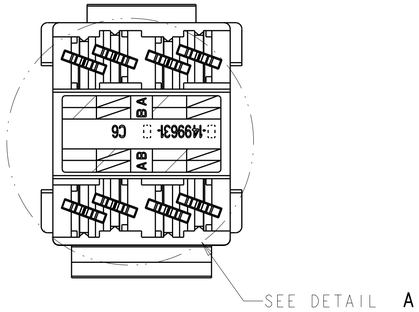

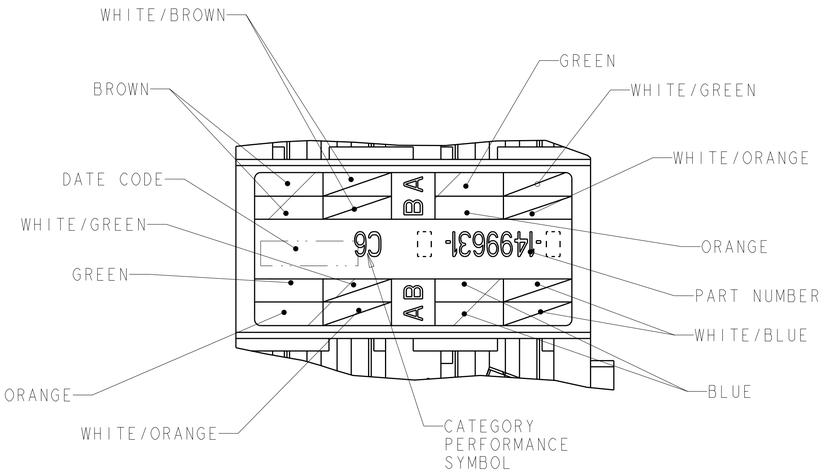

DETAIL A
SCALE 8:1

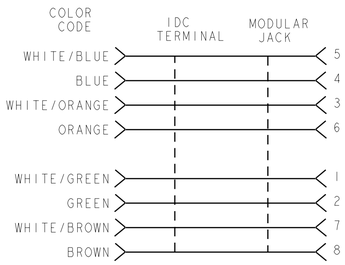

ELECTRICAL SCHEMATIC
T568A

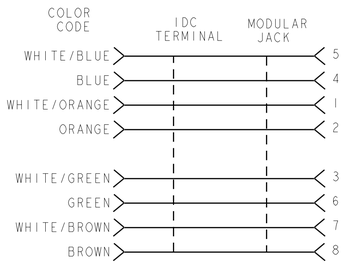

ELECTRICAL SCHEMATIC
T568B

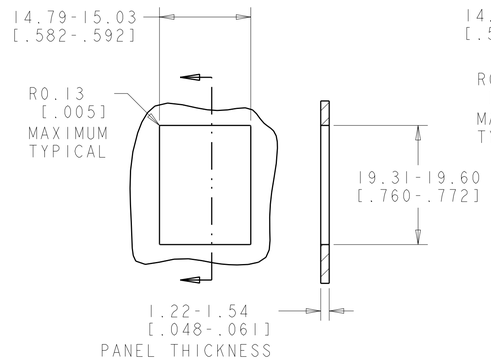

SINGLE PANEL CUTOUT

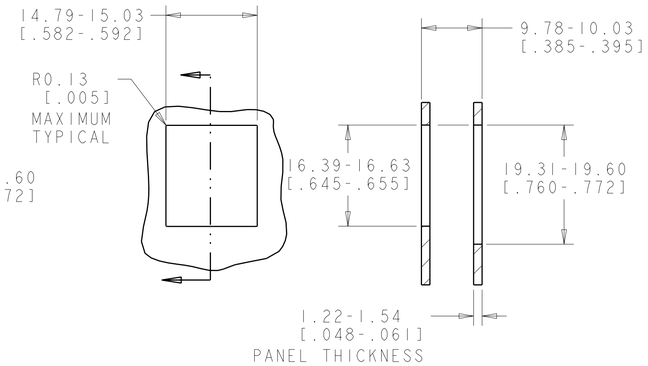

SUGGESTED FLUSH MOUNT
PANEL APPLICATION CUTOUT

PACKAGE	HOUSING COLOR	PART NUMBER
6	ALPINE WHITE	1-1499631-3
	ELECTRIC IVORY	1-1499631-1
	VIOLET	1-1499631-0
	GREEN	1499631-9
	YELLOW	1499631-8
	RED	1499631-7
	BLUE	1499631-6
	ORANGE	1499631-5
	NEMA GRAY	1499631-4
	WHITE	1499631-3
	BLACK	1499631-2
	LIGHT ALMOND	1499631-1

THIS DRAWING IS A CONTROLLED DOCUMENT.

DIMENSIONS: MM[INCHES]

TOLERANCES UNLESS OTHERWISE SPECIFIED:
0 PLC ±-
1 PLC ±-
2 PLC ±-
3 PLC ±-
4 PLC ±-
ANGLES ±-

MATERIAL -
FINISH -

DWN L. SMITH 30JUN2005
CHK C. DOOLEY 06JUL2005
APVD C. DOOLEY 06JUL2005
PRODUCT SPEC -
APPLICATION SPEC - 8
WEIGHT -

TE Connectivity

NAME ASSY, CAT 6, UTP, KL SERIES JACK

SIZE A1 | CAGE CODE 00779 | DRAWING NO C-1499631 | RESTRICTED TO -

CUSTOMER DRAWING | SCALE 4:1 | SHEET 1 OF 1 | REV D3

4805 (3/11)

Pro/ENGINEER DRAWING