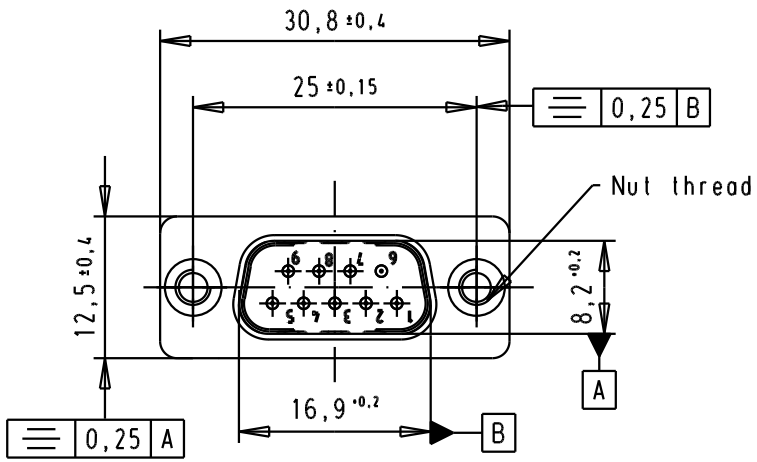

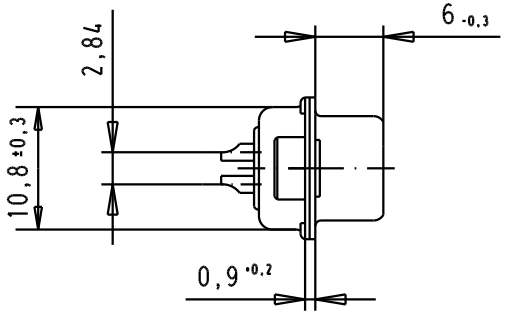

Solder buckets for AWG 20 Max

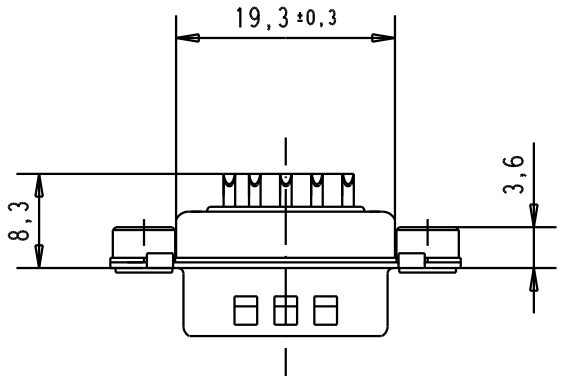

SPECIFICATION

Mating Cycles	500
Filter type	C
Capacitance	1000pf ±20%
Working Voltage	100v
Current Rating	7.5A
Insulation Resistance	>1GΩ

FREQUENCY (MHz)	ATTENUATION (dB)
5	1dB
10	3dB
50	12dB
100	20dB
500	34dB
1000	30dB

09641217238	M3		33241	14/10/05	JMDR
09641217237	UNC 4-40		31058	8-JUL-02	CV
Part number	Nut thread		Mod.	Dat.	Name

	Dat.	Name
Detail.	8-JUL-02	CV
Insp.		
Stand.		

All Dim. in mm
Orig. Size DIN A 4

D-Sub, male, straight
9 Poles, solder buckets,
tin plated shell with
dimples and clinch nuts

Ma?Mstab/ Scale
1.5:1

HARTING EURL
F-95972 Paris

TB 0964121723x

Sub.

Blatt/ Page
1/1