Alle Rechte vorbehalten/ *All rights reserved*

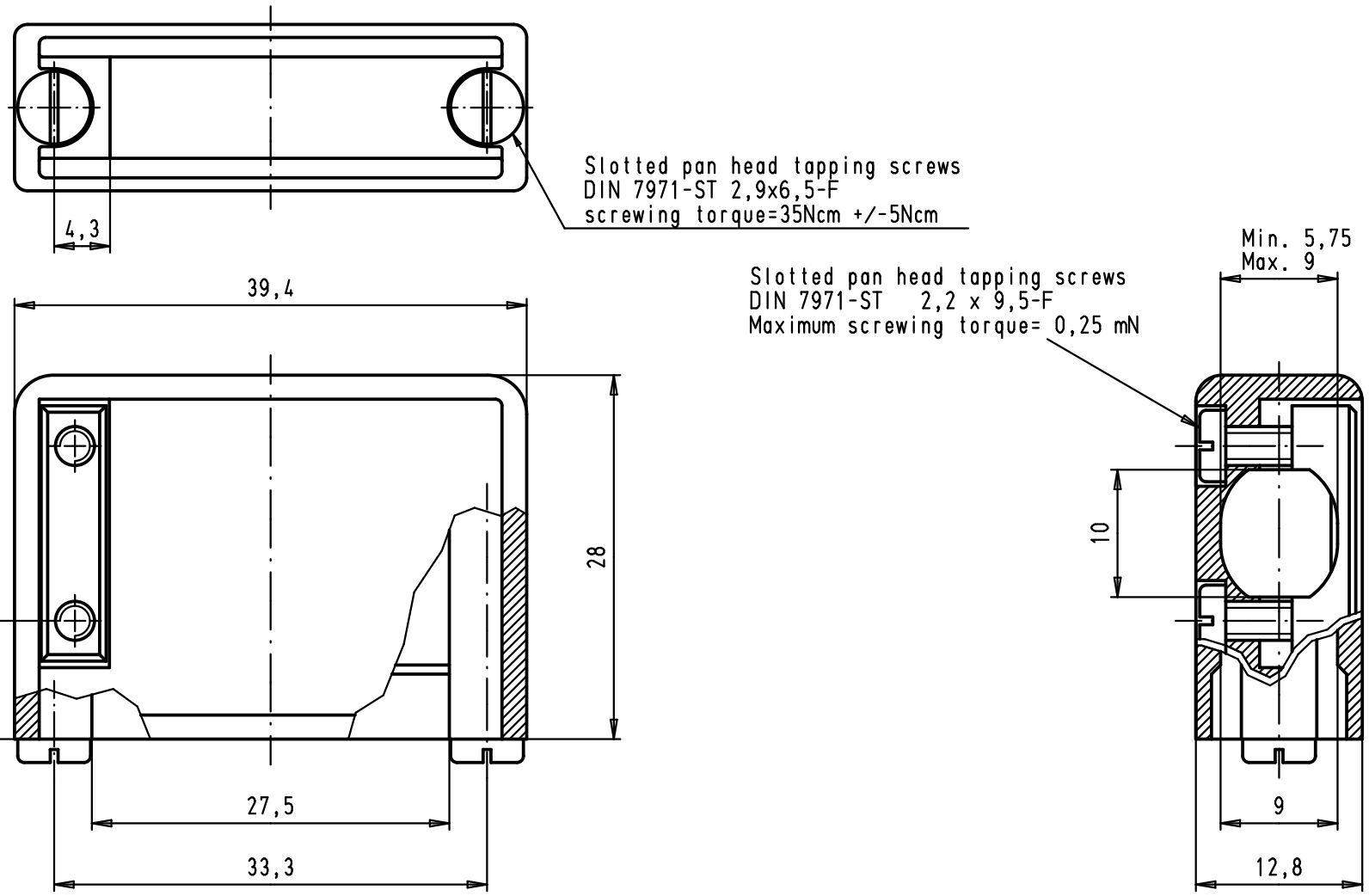

09 67 015 0513	Thermoplastic metallized
09 67 015 0511	Thermoplastic grey RAL 7032
Part number	Material

				Dat.	Name
			Detail.	28/03/02	CV
			Insp.	25-MAY-11	JMDV
EC03223	25-MAY-11	SD	Stand.		
34886	26/02/08	PK			
29760	28/03/02	CV			
Mod.	Dat.	Name			

All Dim. in mm
Orig. Size DIN A 4

D-Sub, hood 15 poles
for spring or slide
locking, side cable entry

Maßstab/ *Scale* 2:1

HARTING EURL
F-95972 Paris

TB 09 67 015 051X

Sub.

Blatt/ *Page* 1/1