PRODUCT NUMBER
SEE TABLE

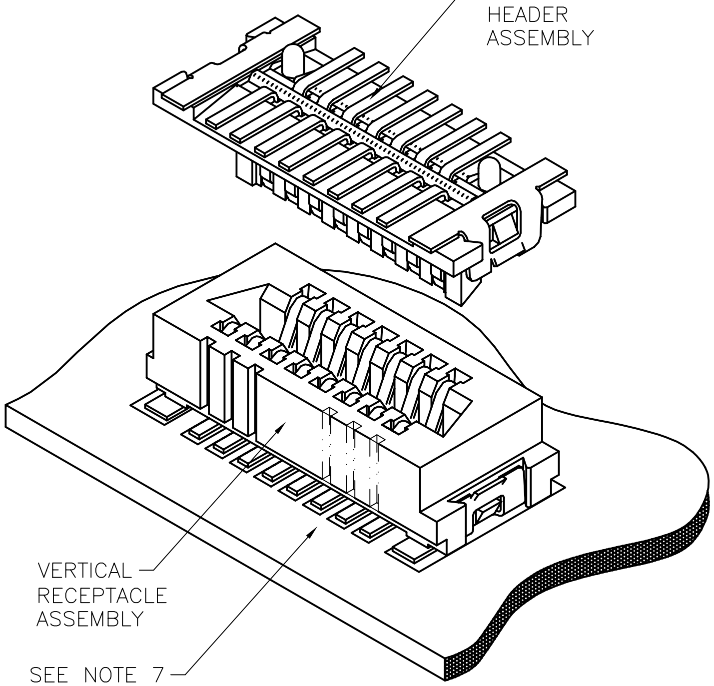

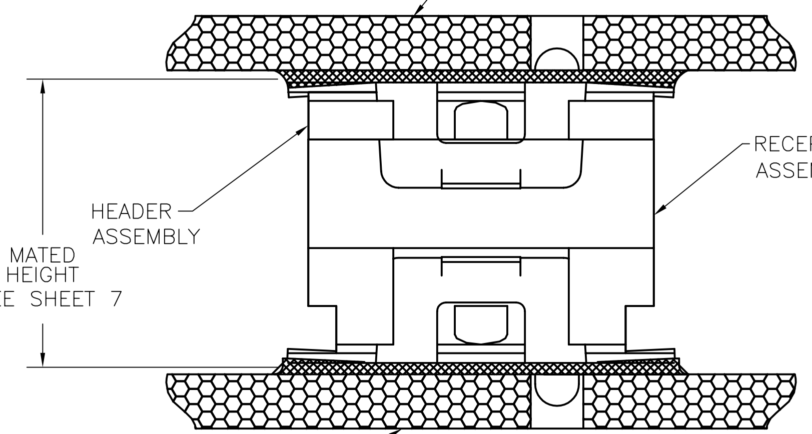

SECTION A–A
ROTATED 90°
N.T.S.

mat'l. code				surface ISO 1302 √	tolerance ISO 406 ISO 1101	projection	product family CONAN
ltr	ecn no	dr	date	tolerances unless otherwise specified			title
A	M08–0040	AGS	02/14/08	angles	linear .XX±.01/.X±.3	INCH/MM	CONAN™ A–MAGNETIC CONNECTOR
B	M08–0144	AGS	21/5/08		.XXX±.005/.XX±.13		
C	M08–0150	MHT	5/26/08	0°±2°	.XXXX±.0020/.XXX±051	scale 5:1	
				dr A.GARCIA	02/14/08		dwg no 10084781 sheet 1 of 7 size A3
				engr C.MARTINEZ	02/14/08		
				chr C.MARTINEZ	02/14/08		
				appd C.MARTINEZ	02/14/08		type Product Customer Drawing

sheet index	revision	C	C	C	C	C	C	C
	sheet	1	2	3	4	5	6	7

FCIconnect.com
Copyright FCI
form: A3

PRODUCT NUMBER
SEE TABLE

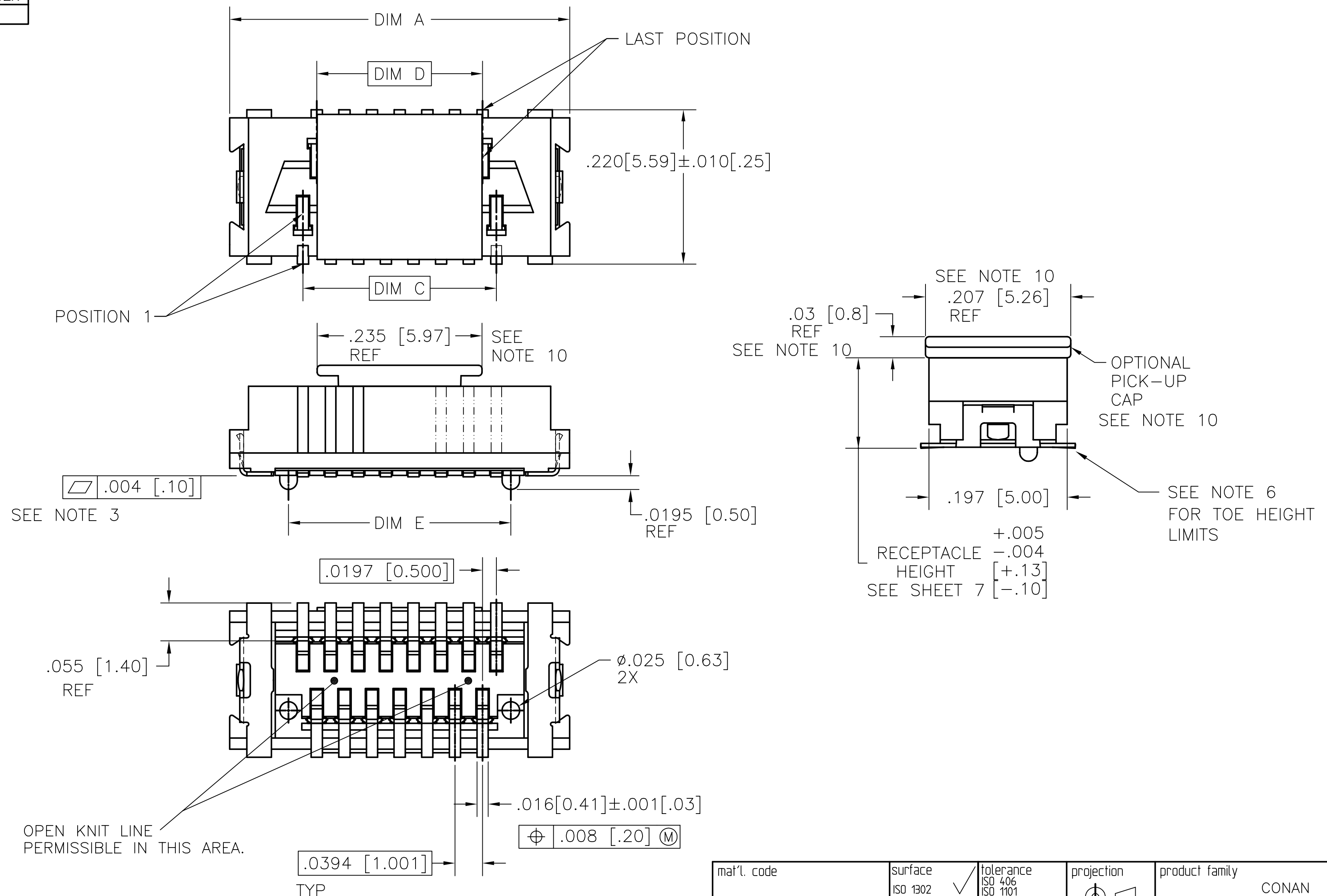

mat'l. code	surface ISO 1302	tolerance ISO 406 ISO 1101	projection	product family CONAN
ltr / ecn no / dr / date	tolerances unless otherwise specified			title CONAN™ A–MAGNETIC CONNECTOR
C	angles 0°±2°	linear .XX±.01/.X±.3 .XXX±.005/.XX±.13 .XXXX±.0020/.XXX±.051	INCH/MM scale 5:1	
	dr A.GARCIA 02/14/08			dwg no 10084781 sheet 2 of 7 size A3
	engr C.MARTINEZ 02/14/08			
	chr C.MARTINEZ 02/14/08			
	appd C.MARTINEZ 02/14/08			type Product Customer Drawing
sheet index	revision sheet			

FCIconnect.com
Copyright FCI
form: A3

PDM: Rev:C STATUS: Released Printed: Oct 12, 2010

PRODUCT NUMBER
SEE TABLE

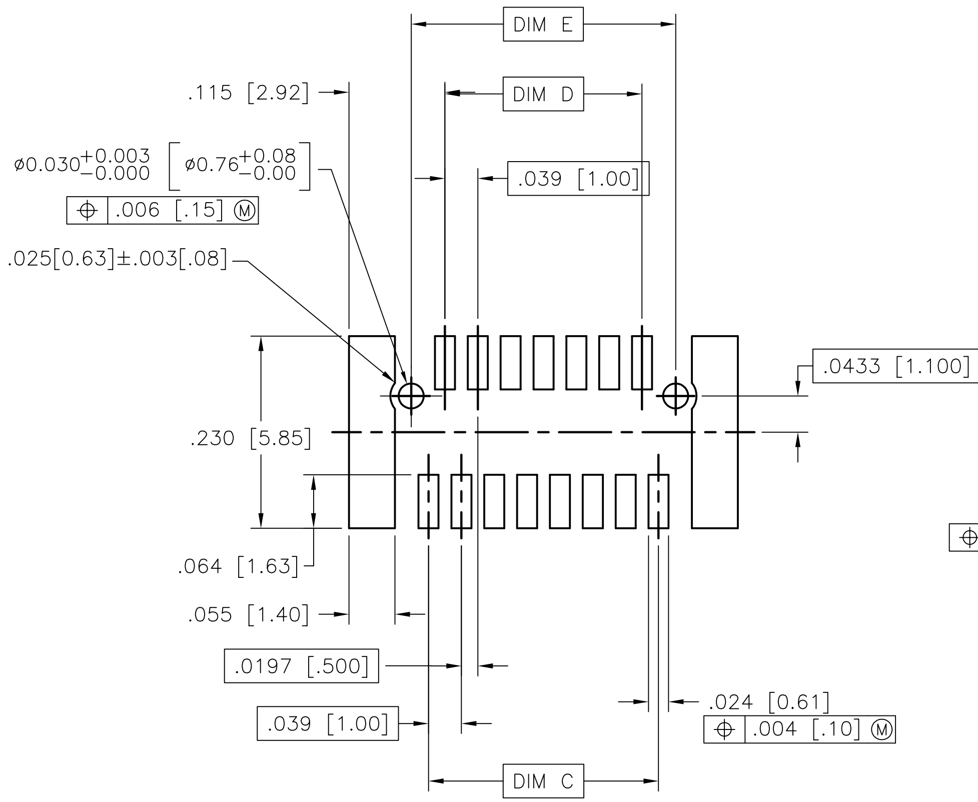

RECOMMENDED
PAD LAYOUT

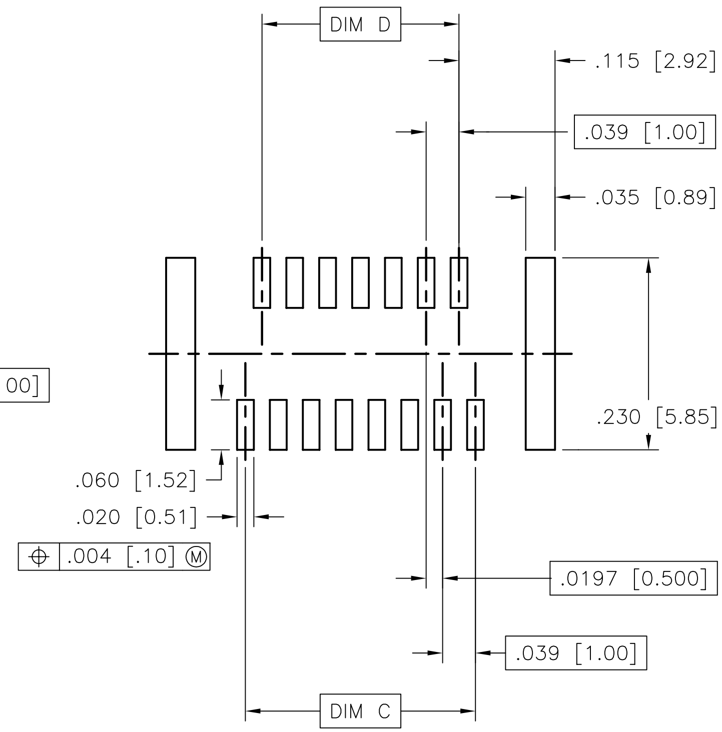

RECOMMENDED
STENCIL LAYOUT
FOR RECEPTACLE

mat'l. code	surface ISO 1302	tolerance ISO 406 ISO 1101	projection	product family CONAN
ltr / ecn no / dr / date	tolerances unless otherwise specified			title
C	angles 0°±2°	linear .XX±.01/.X±.3 .XXX±.005/.XX±.13 .XXXX±.0020/.XXX±051	INCH/MM scale 5:1	CONAN™ A–MAGNETIC CONNECTOR
	dr A.GARCIA 02/14/08			dwg no 10084781 sheet 3 of 7 size A3
	engr C.MARTINEZ 02/14/08			
	chr C.MARTINEZ 02/14/08			
	appd C.MARTINEZ 02/14/08			type Product Customer Drawing
sheet index	revision sheet			

Copyright FCI
FCIconnect.com

form: A3

PDM: Rev:C STATUS:Released Printed: Oct 12, 2010

PRODUCT NUMBER
SEE TABLE

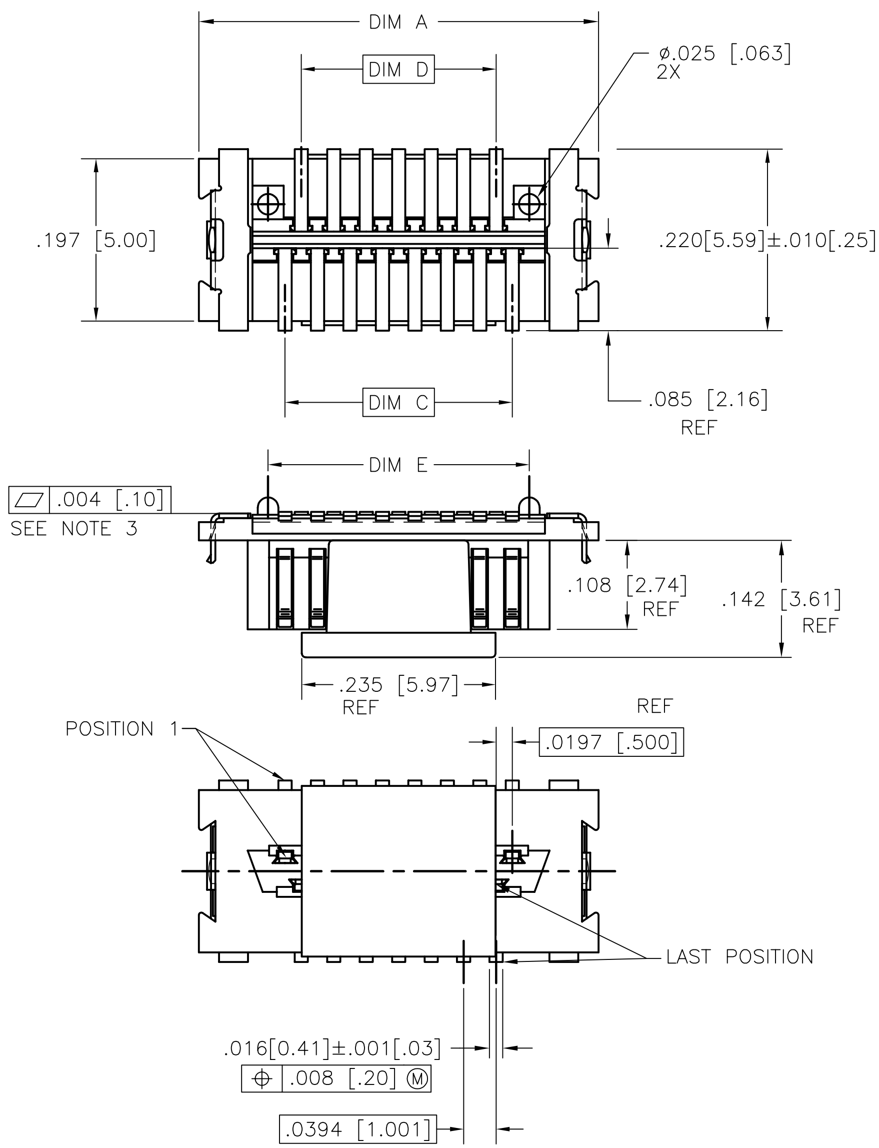

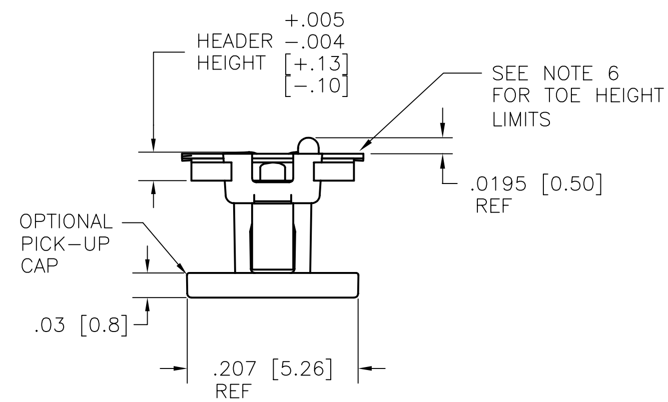

mat'l. code	surface ISO 1302	tolerance ISO 406 ISO 1101	projection	product family CONAN
ltr / ecn no / dr / date	tolerances unless otherwise specified			title
C	angles 0°±2°	linear .XX±.01/.X±.3 .XXX±.005/.XX±.13 .XXXX±.0020/.XXX±.051	INCH/MM scale 5:1	CONAN™ A−MAGNETIC CONNECTOR
	dr A.GARCIA 02/14/08			dwg no 10084781 sheet 4 of 7 size A3
	engr C.MARTINEZ 02/14/08			
	chr C.MARTINEZ 02/14/08			
	appd C.MARTINEZ 02/14/08			type Product Customer Drawing
sheet index	revision sheet			

Copyright FCI
FCIconnect.com
form: A3

PDM: Rev:C STATUS: Released Printed: Oct 12, 2010

PRODUCT NUMBER
SEE TABLE

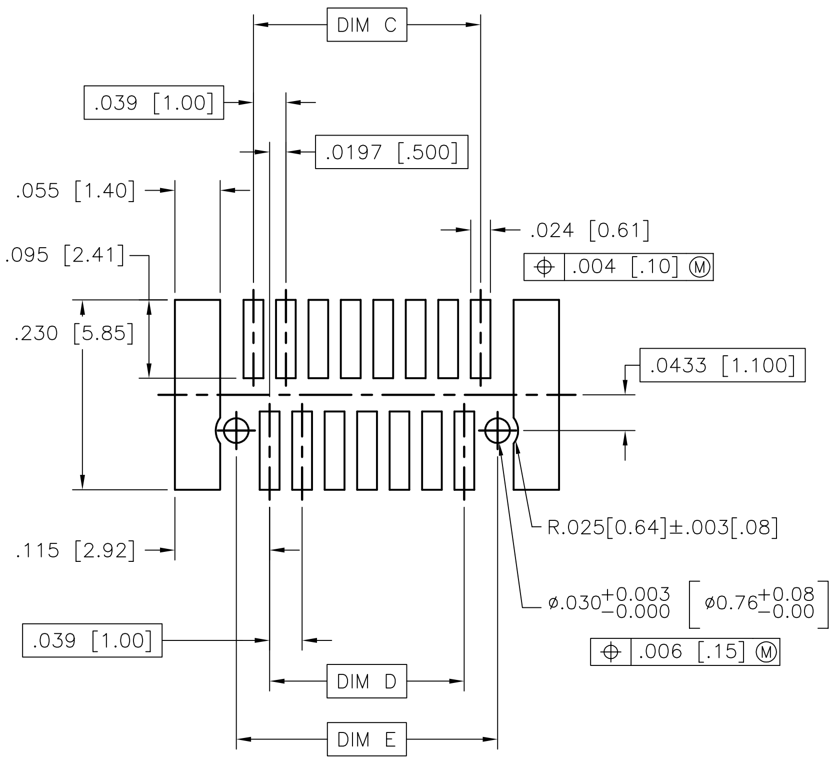

RECOMMENDED PAD LAYOUT

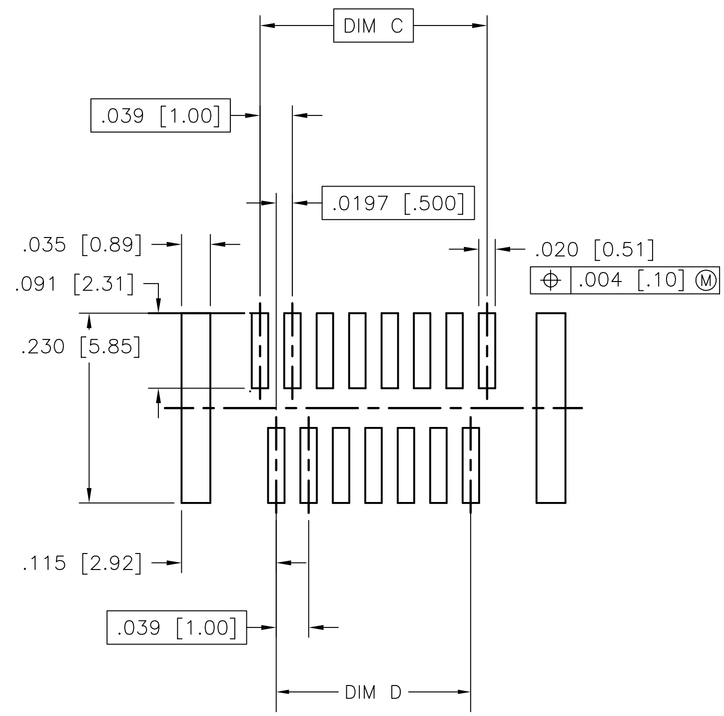

RECOMMENDED STENCIL LAYOUT FOR HEADER

mat'l. code	surface ISO 1302	tolerance ISO 406 ISO 1101	projection	product family CONAN		
ltr / ecn no / dr / date	tolerances unless otherwise specified		INCH/MM	title CONAN™ A–MAGNETIC CONNECTOR		
C	angles 0°±2°	linear .XX±.01/.X±.3 .XXX±.005/.XX±.13 .XXXX±.0020/.XXX±.051	scale 5:1			
	dr A.GARCIA 02/14/08			dwg no 10084781	sheet 5 of 7	size A3
	engr C.MARTINEZ 02/14/08					
	chr C.MARTINEZ 02/14/08					
	appd C.MARTINEZ 02/14/08			type Product Customer Drawing		
sheet index	revision sheet					

FCIconnect.com
Copyright FCI
form: A3

PDM: Rev:C STATUS: Released Printed: Oct 12, 2010

PRODUCT NUMBER	POS	DIM "A"	DIM "C"	DIM "D"	DIM "E"
10084781-TCWXY09	9	.366 [9.30]	.157 [4.00]	.118 [3.00]	.1990 [5.055]
-TCWXY11	11	.406 [10.30]	.197 [5.00]	.157 [4.00]	.2380 [6.045]
-TCWXY15	15	.484 [12.30]	.276 [7.00]	.236 [6.00]	.3170 [8.052]
-TCWXY21	21	.602 [15.30]	.394 [10.00]	.354 [9.00]	.4350 [11.049]
-TCWXY25	25	.681 [17.30]	.472 [12.00]	.433 [11.00]	.5140 [13.056]
-TCWXY31	31	.800 [20.30]	.591 [15.00]	.551 [14.00]	.6320 [16.053]
-TCWXY41	41	.996 [25.30]	.787 [20.00]	.748 [19.00]	.8290 [21.057]
-TCWXY51	51	1.193 [30.30]	.984 [25.00]	.945 [24.00]	1.0260 [26.060]
-TCWXY69	69	1.547 [39.30]	1.339 [34.00]	1.299 [33.00]	1.3800 [35.052]

NOTES:

1. MATERIALS:

   HOUSING – LCP, UL-94V-0. COLOR: NATURAL.
   TERMINAL – COPPER ALLOY
   PLATED WITH 50u"/1.27u Au CONTACT AREA
   AND 200u"/5.08u SnPb ON SOLDER LEGS WITH
   AN OVERALL 50u"/1.27u Cu UNDERPLATE.

2. REFERENCE GS-12-006 FOR PRODUCT PERFORMANCE DATA.

(3) SEE TA-774 FOR FURTHER DESCRIPTION OF HOW THIS DIMENSION IS APPLIED.

(4) PICK AND PLACE CAP OR TAPE IS ONLY AVAILABLE WITH OPTION 3 PACKAGING. (PSA ADHESIVE SEALED). ALSO, PSA PACKAGING REQUIRES A PICK AND PLACE CAP.

5. RECOMMENDED SOLDER PASTE THICKNESS IS .006 TO .008 INCHES THICK.

(6) THE TOE HEIGHT OF THE SOLDER TAIL SHALL BE MEASURED FROM THE LOWEST POINT OF THE .004 CO-PLANARITY GRAVITY PLANE. THIS MEASUREMENT IS NOT TO EXCEED A WINDOW OF .000 TO .007 INCHES.

(7) THREE SLOTS MAY BE LOCATED AT EITHER END OF HOUSING.

(8) 5.50mm MATED HEIGHT IS ONLY AVAILABLE IN 9, 15 AND 31 POS.

(9) 7.50mm MATED HEIGHT IS ONLY AVAILABLE IN 9 POS.

(10) APPLIES TO 10086535-213XYZZ AND 10084781-313XYZZ OPTIONS ONLY.

11. THE HOUSING WILL WITHSTAND EXPOSURE TO 260°C PEAK TEMPERATURE FOR 30 SECONDS IN A CONVECTION INFRA RED OR VAPOR PHASE REFLOW OVEN. SEE APPLICATION/PROCEDURES IF THEY ARE AVAILABLE

mat'l. code		surface ISO 1302	tolerance ISO 406 ISO 1101	projection	product family: CONAN
ltr / ecn no / dr / date	C	tolerances unless otherwise specified			title: CONAN™ A-MAGNETIC CONNECTOR
		angles: 0°±2°	linear: .XX±.01/.X±.3; .XXX±.005/.XX±.13; .XXXX±.0020/.XXX±.051	INCH/MM	
				scale 5:1	
		dr: A.GARCIA 02/14/08			dwg no: 10084781 sheet 6 of 7 size A3
		engr: C.MARTINEZ 02/14/08			
		chr: C.MARTINEZ 02/14/08			
		appd: C.MARTINEZ 02/14/08			type: Product Customer Drawing
sheet index / revision sheet					

FCIconnect.com
Copyright FCI

form: A3

PDM: Rev:C STATUS: Released Printed: Oct 12, 2010

PRODUCT NUMBER
SEE TABLE

CONAN ASSEMBLY PART NUMBER

10084781—T C W X Y ZZ

TYPE	T
HEADER WITH NO PEGS	0
HEADER WITH PEGS	1
RECEPTACLE WITH NO PEGS	2
RECEPTACLE WITH PEGS	3

PICK AND PLACE CAP OR TAPE (NOTE 4)	C
WITHOUT CAP OR TAPE	0
WITH CAP	1
WITH TAPE (RECEPTACLE ONLY)	2

PACKAGING	W
TUBE	2
PRESSURE SEALED TAPE & REEL	3

NOTE 4

X	PLATING
1	50u"/1.27u Au

	Y	HEADER HEIGHT	RECEPTACLE HEIGHT	MATED HEIGHT +.010 −.008 [+.25] [−.20]
	1	.034 [.86]	.129 [3.28]	.163 [4.15]
	2	.048 [1.23]	SEE Y=1 FOR ALL RECEPTACLES	.177 [4.50]
	3	.068 [1.73]		.197 [5.00]
	4	.107 [2.72]		.236 [6.00]
	5	.1465 [3.721]		.276 [7.00]
*	6	.088 [2.23]		.216 [5.50]
* *	7	.1665 [4.229]		.296 [7.52]

* NOTE 8
* * NOTE 9

ZZ	NUMBER OF POSITIONS
09	9
11	11
15	15
21	21
25	25
31	31
41	41
51	51
69	69

EXAMPLE: 10084781−2131125
IS A CONAN RECEPTACLE ASSEMBLY, HAVING NO PEGS AND WITH A PICK AND PLACE CAP. IT ALSO HAS AU PLATING, IS .13 [3.2] HIGH AND 25 POSITIONS AND IS PACKAGED IN PRESSURE SEALED TAPE, REEL

FCIconnect.com
Copyright FCI

mat'l. code	surface ISO 1302	tolerance ISO 406 ISO 1101	projection	product family CONAN
ltr: C	tolerances unless otherwise specified: angles 0°±2°; linear .XX±.01/.X±.3, .XXX±.005/.XX±.13, .XXXX±.0020/.XXX±.051		INCH/MM; scale 5:1	title: CONAN™ A—MAGNETIC CONNECTOR
dr	A.GARCIA	02/14/08		dwg no 10084781; sheet 7 of 7; size A3
engr	C.MARTINEZ	02/14/08		type: Product Customer Drawing
chr	C.MARTINEZ	02/14/08		
appd	C.MARTINEZ	02/14/08		

sheet index | revision sheet

form: A3