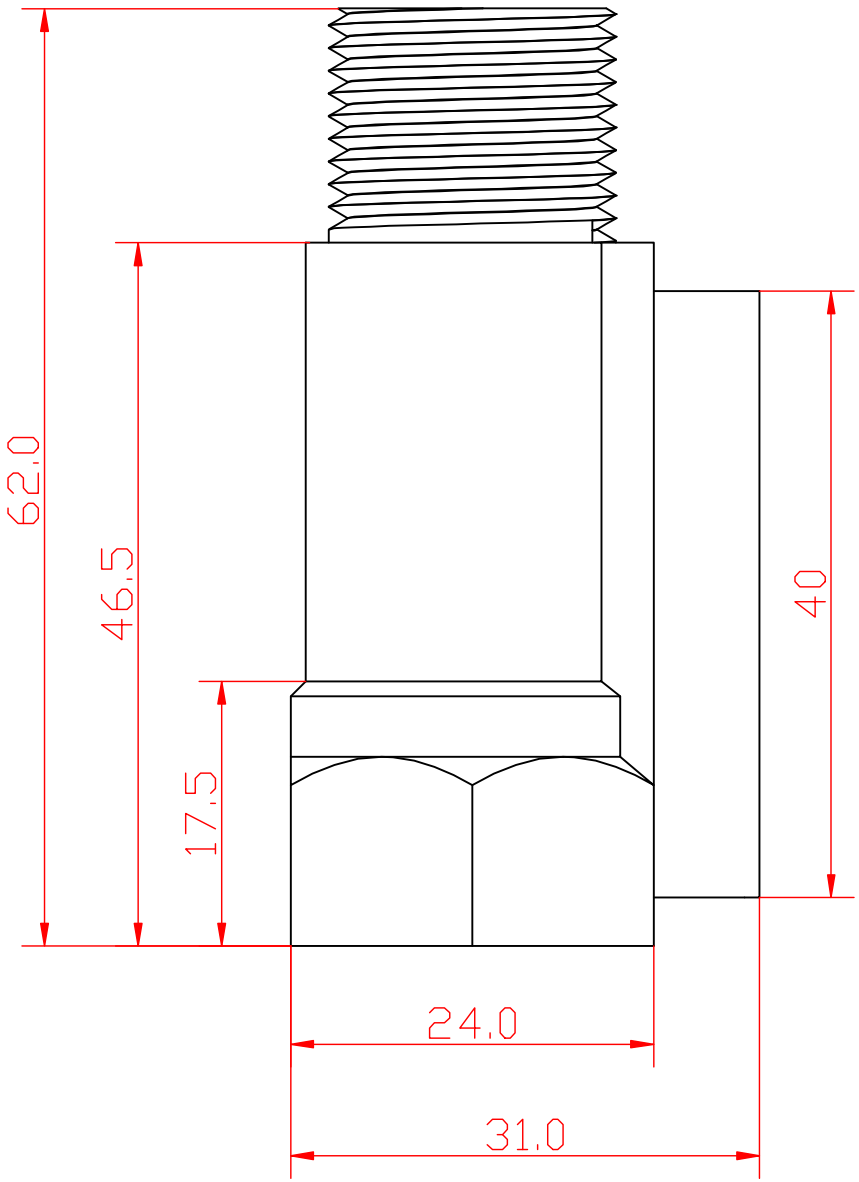
62.0
46.5
17.5
40
24.0
31.0

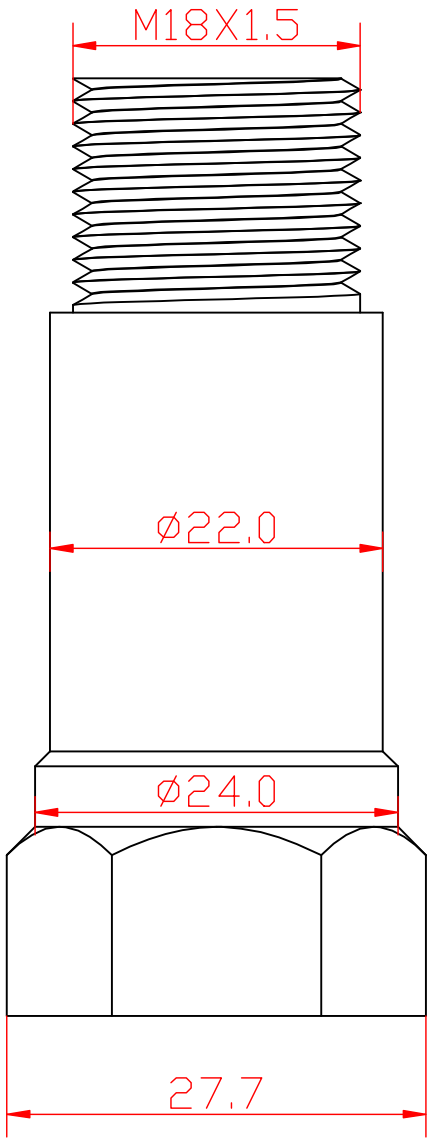
M18X1.5
Ø22.0
Ø24.0
27.7